INSTALLATION AND OPERATION INSTRUCTIONS

Merit™ Series
Wood burning Fireplaces

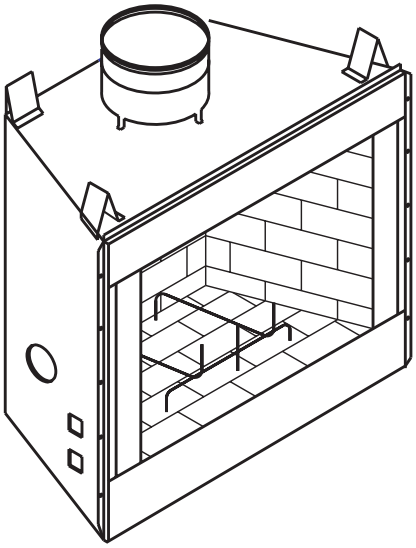

MODELS

WRT2042WS
WRT2042WSI
WCT2042WS
WCT2042WSI

P126631 01

REPORT NO. F09-171

P/N 126631-01 Rev. A 11/01/13

We recommend that our woodburning hearth products be installed and serviced by professionals who are certified in the U.S. by the National Fireplace Institute® (NFI) as NFI Woodburning Specialists or who are certified in Canada by Wood Energy Technical Training (WETT).

KEEP THESE INSTRUCTIONS FOR FUTURE REFERENCE

This book is valuable. In addition to instructing you on how to install and maintain your appliance, it also contains information that will enable you to obtain replacement parts or accessory items when needed. Keep it with your other important papers.

This fireplace is approved for use as a wood burning fireplace or for use with a vented gas log approved to ANS Z21.60, Z21.84 standards or for use with a vent-free gas log heater approved to ANS Z21.11.2 standard. An INNOVATIVE HEARTH PRODUCTS, LLC hood must be installed when using a vent-free log heater (see Accessories, page 18).

This wood burning fireplace complies with UL127-CAN/ULC-S610-M87 standard as a FACTORY BUILT APPLIANCE.

FOR CANADA: The authority having jurisdiction (such as the municipal building department, fire department, etc.) should be contacted before installation to determine the need to obtain a permit.

INSTALLER: Leave this manual with the appliance.

CONSUMER: Retain this manual for future reference.

Thank you for your purchase. We appreciate your business!

Please carefully read and follow all instructions in this manual. **Pay special attention to all warnings and safety information.**

Following these safety, care, and operation instructions will help ensure many years of dependable and enjoyable service from your fireplace.

Register your product online today!

To help us keep you up-to-date on product information and offers, please take a few moments to register your product online at www.Superiorfireplaces.US.com **(Owner Resources/Product Registration).**

Please read and understand these instructions before installing or operating.

TABLE OF CONTENTS

Safety....2
Specifications....4
Fireplace Installation....5
Venting Installation....7
Optional Gas Line Installation....13
Operation and Maintenance....14
Technical Service....15
Replacement Parts....15
Parts....16
Accessories....18

SAFETY

⚠ WARNING: Improper installation, adjustment, alteration, service or maintenance can cause injury, property damage or loss of life. Refer to this manual for assistance or additional information. Consult a qualified installer or local distributor.

IMPORTANT: Check local codes before installing this fireplace.

Before beginning installation of this fireplace, read these instructions through completely.

- This INNOVATIVE HEARTH PRODUCTS, LLC (IHP) fireplace and its components are safe when installed according to this installation manual. Unless you use IHP components, which have been designed and tested for the fireplace system, you may cause a fire hazard.
- The IHP warranty will be voided by and IHP disclaims any responsibility for the following actions.

  a. Modification of the fireplace, components, doors, air inlet system and damper control.

  b. Use of any component part not manufactured or approved by IHP in combination with an IHP fireplace system.

Proper installation is the most important step in ensuring safe and continuous operation of the fireplace. Consult the local building codes as to the particular requirements concerned with the installation of all factory built fireplaces.

⚠ WARNING: Do not install a fireplace insert in this fireplace unless the manufacturer's instructions with the insert specifically state this fireplace has been tested for use with this insert.

FOR YOUR SAFETY

- **Do not store or use gasoline or any other flammable vapors or liquids in the vicinity of this or any other appliance.**
- **Due to high temperatures, the appliance should be located out of traffic and away from furniture and draperies.**
- **Do not place clothing or other flammable materials on or near the appliance.**
- **Never leave children unattended when a fire is burning in the fireplace.**

⚠ WARNING: Use solid wood or processed solid fuel fire logs only. "Do not poke or stir the logs while they are burning. Use only firelogs that have been evaluated for the application in fireplace and refer to firelog warnings and caution markings on packaging prior to use."

This fireplace is not intended to be used as a substitute for a furnace to heat an entire home. Use for supplemental heat only.

Ovefiring of a fireplace is a condition where excessive temperatures are reached, beyond the design capabilities of the appliance. The damage that occurs from ovefiring is not covered under the manufacturer's limited warranty.

⚠ WARNING: CONTINUED OVERFIRING CAN PERMANENTLY DAMAGE YOUR FIREPLACE SYSTEM. SOME EXAMPLES OF CONDITIONS THAT COULD CAUSE OVERFIRING ARE:

- **BURNING QUANTITIES OF SCRAP LUMBER, PINE BRANCHES, PAPER OR CARDBOARD BOXES WHICH EXCEED THE VOLUME OF THE NORMAL LOG FIRE.**
- **BURNING TRASH, CHEMICALS OR CHEMICALLY TREATED COMBUSTIBLES.**

"Disposal of Ashes

Ashes should be placed in a metal container with a tight-fitting lid. The closed container of ashes should be placed on a noncombustible floor or on the ground, well away from all combustible materials, pending final disposal. If the ashes are disposed of by burial in soil or otherwise locally dispersed, they should be retained in the closed container until all cinders have thoroughly cooled."

"WHEN USING THE DECORATIVE APPLIANCE, THE FIREPLACE DAMPER MUST BE SET IN THE FULLY OPEN POSITION."

"Never use gasoline, gasoline-type lantern fuel, kerosene, charcoal lighter fluid, or similar liquids to start or 'freshen up' a fire in this fireplace. Keep all such liquids well away from the fireplace while it is in use."

Use SOLID WOOD only for fuel. It is best to use dry and well seasoned hardwood. Softwoods tend to burn very quickly. DO NOT use treated wood, charcoal, coal, trash, driftwood or woods that have been dipped in tar, pitch, pine tar, creosote, etc. Wood products made with synthetic binders, such as plywood, produce abnormally high temperatures and sputtering, smoking fires. When burning artificial logs, please read and follow the instructions provided by the manufacturer.

Never burn treated construction lumber or scraps. These woods burn excessively hot and may contain chemicals used to treat insects and fungus. When burned, these chemicals can pose a significant hazard.

⚠ WARNING: BURNING IMPROPER FUEL (I.E. CHARCOAL) CAN RESULT IN CARBON MONOXIDE POISONING, WHICH MAY LEAD TO DEATH!

Carbon Monoxide Poisoning – Early signs of carbon monoxide poisoning resemble the flu with headaches, dizziness, or nausea. If you have these signs, get fresh air at once! Have the appliance inspected by a qualified service technician. Some people are more affected by carbon monoxide than others. These include pregnant women, people with heart or lung disease or anemia, those under the influence of alcohol, and those at high altitudes.

Ventilation Requirements - Provide adequate air for combustion. The fresh air requirements of this appliance must be met within the space where it will be installed.

Smoke Detectors - Since there are always several potential sources of fire in any home, we recommend installing smoke detectors. If possible, install the smoke detector in a hallway adjacent to the room (to reduce the possibility of occasional false activation from the heat produced by the appliance). If your local code requires a smoke detector be installed within the same room, you must follow the requirements of your local code. Check with your local building department for requirements in your area.

"Creosote – Formation and Need for Removal

When wood is burned slowly, it produces tar and other organic vapors, which combine with expelled moisture to form creosote. The creosote vapors condense in the relatively cool chimney flue of a slow-burning fire. As a result, creosote residue accumulates on the flue lining. When ignited this creosote makes an extremely hot fire.

The chimney shall be inspected at least twice a year during the heating season to determine when a creosote buildup has occurred. When creosote has accumulated (1/8" [3 mm] or more) it shall be removed to reduce the risk of a chimney fire."

SPECIFICATIONS

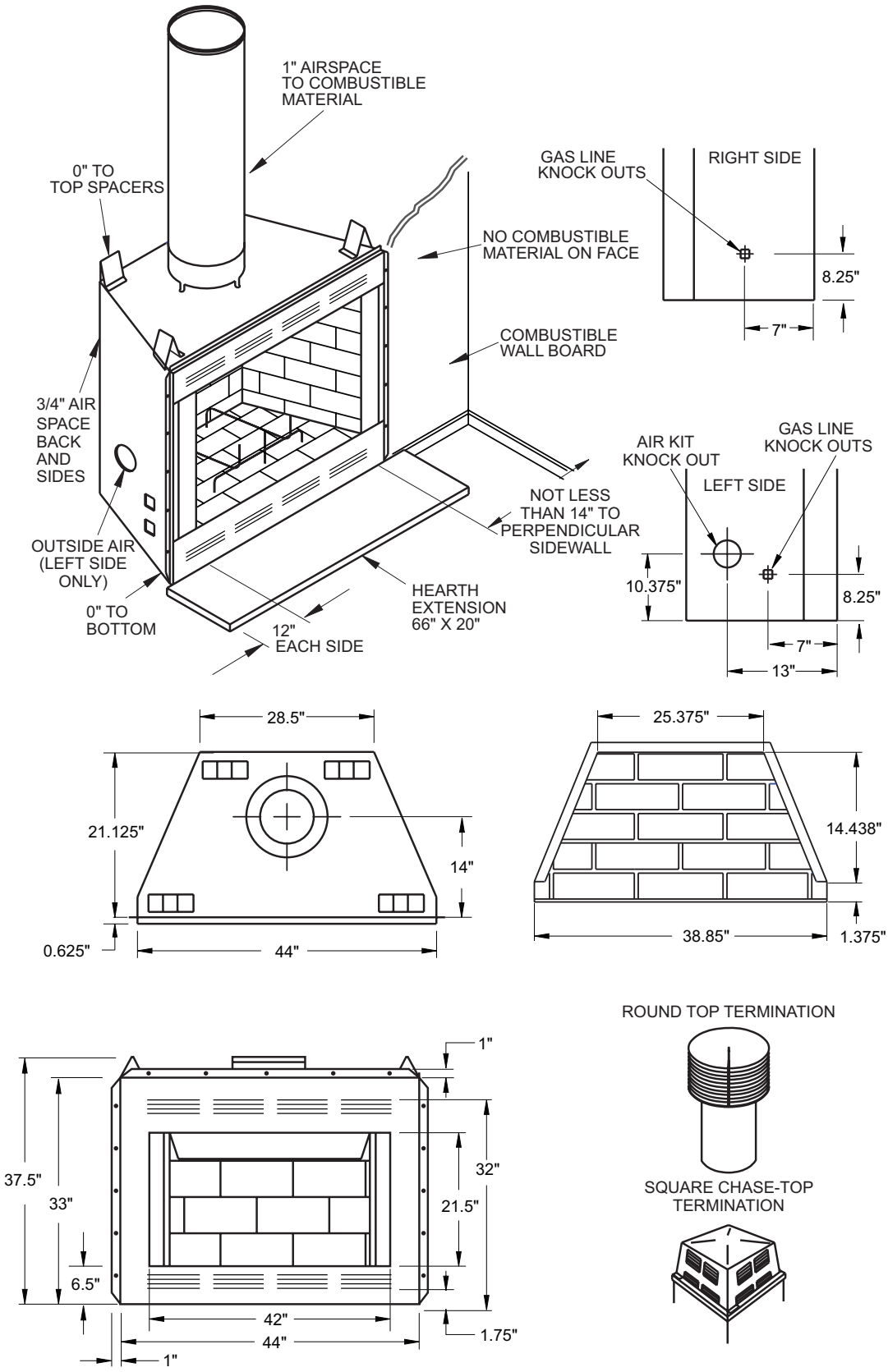

FIREPLACE INSTALLATION

SELECTING LOCATION

To determine safest and most efficient location for fireplace, you must take into consideration the following guidelines:

1. Location must allow for proper clearances (see Figures 1 and 2).
2. Consider a location where fireplace will not be affected by drafts, air conditioning ducts, windows or doors.
3. A location that avoids cutting of joists or roof rafters will make installation easier.
4. An outside air kit is available with this fireplace (see Optional Outside Air Kit on page 7).

MINIMUM CLEARANCE TO COMBUSTIBLES

Back and sides of fireplace	3/4" minimum*
Floor**	0" minimum
Perpendicular wall to opening	12" minimum
Top spacers	0" minimum
Mantel clearances	see Mantels, page 6
Chimney outer pipe surface	1" minimum

* Not required at nailing flanges
** See step 2 of Framing

⚠ WARNING: DO NOT PACK REQUIRED AIR SPACES WITH INSULATION OR OTHER MATERIALS.

Minimum/Maximum Chimney Height

Minimum height of chimney, measured from base of fireplace to flue gas outlet of termination, is 14.5 feet for straight flue or a flue with one elbow set. Maximum distance between elbows is 6 feet. For systems with two elbow sets, minimum height is 22 feet. Maximum height of any system is 50 feet. This measurement includes fireplace, chimney sections and height of termination assembly at level of flue gas outlet (see Figure 20, page 12).

FRAMING

1. Frame opening for fireplace using dimensions shown in Figures 1 and 2.
2. If fireplace is to be installed directly on carpeting, tile (other than ceramic) or any combustible material other than wood flooring, fireplace must be installed upon a metal or wood panel extending full width and depth of fireplace.
3. Set fireplace directly in front of this opening and slide unit back until nailing flanges touch side framing.
4. Check level of fireplace and shim with sheet metal if necessary.
5. Before securing fireplace to prepared framing, ember protector must be placed between hearth extension (not included) and under bottom front edge of fireplace to protect against glowing embers falling through. If fireplace is to be installed on a raised platform, a Z-type ember protector (not included) must be fabricated to fit your required platform height. Ember protector should extend under fireplace a minimum of 1 $^1/_2$". Ember protector should be made of galvanized sheet metal (28 gauge minimum) to prevent corrosion.
6. Using screws or nails, secure fireplace to framing through flanges located on sides of fireplace.

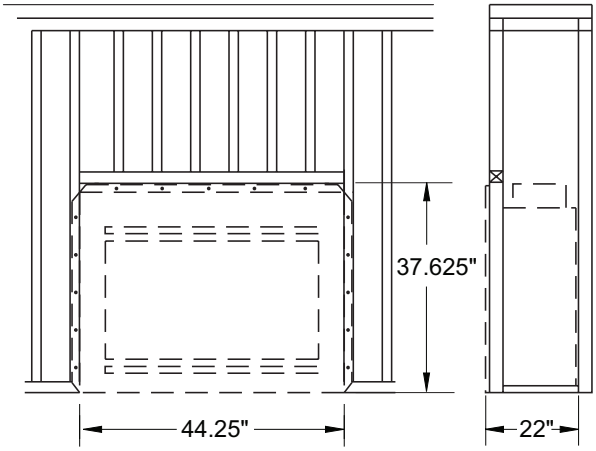

Figure 1 - Framing Dimensions

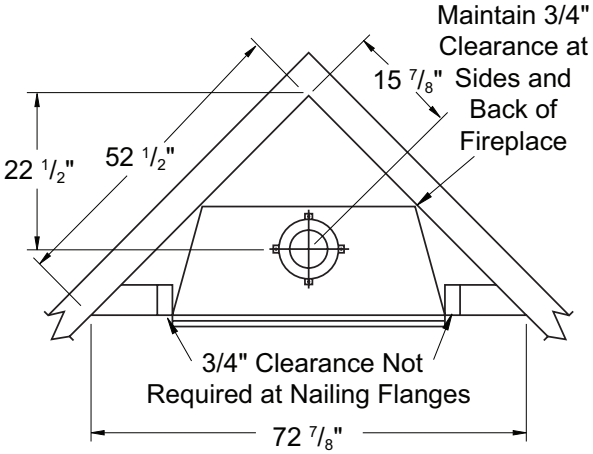

Figure 2 - Corner Installation

HEARTH EXTENSION

A hearth extension projecting a minimum of 16" in front of and a minimum of 8" beyond each side of fireplace opening is required to protect combustible floor construction in front of fireplace. Fabricate a hearth extension using a material which meets the following specifications: a layer of noncombustible, inorganic material having a thermal conductivity of k = .84 BTU IN/FT^2 HR °F (or less) at 1" thick. For example, if material selected has a k factor of 0.25, such as glass fiber, the following formula would apply:

$$\frac{0.25}{0.84} \times 1.0" = 0.30" \text{ thickness required}$$

Thermal conductivity "k" of materials can be obtained from manufacturer or supplier of noncombustible material. If hearth extension is to be covered, use noncombustible material such as tile, slate, brick, concrete, metal, glass, marble, stone, etc. Provide a means to prevent hearth extension from shifting and seal gap between fireplace frame and hearth extension with a non-combustible material such as sand-cement grout (see Figure 3, page 6).

⚠ WARNING: Hearth extension is to be installed only as shown in Figure 3.

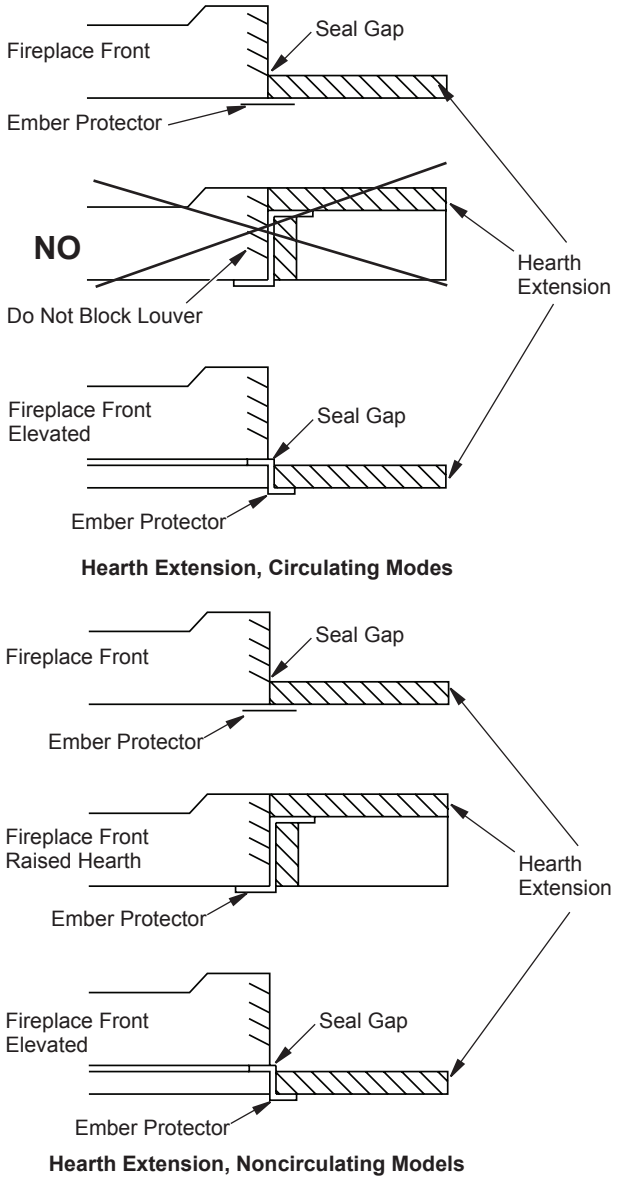

Figure 3 - Hearth Extension

MANTELS

A mantel may be installed if desired (see Figure 4). Woodwork such as wood trims, mantels or any other combustible material projecting from front face must not be placed within 9" of fireplace opening (and within 9" of top louver opening). Combustible materials above 9" and projecting more than 1 $^1/_2$" from fireplace must not be placed less than 12" from top opening of fireplace (NFPA 211, Section - Clearance from Combustible Material).

Mantels or any other combustible material may come up to side edge of black metal face of fireplace if projection from front face falls within limits shown in Figure 5.

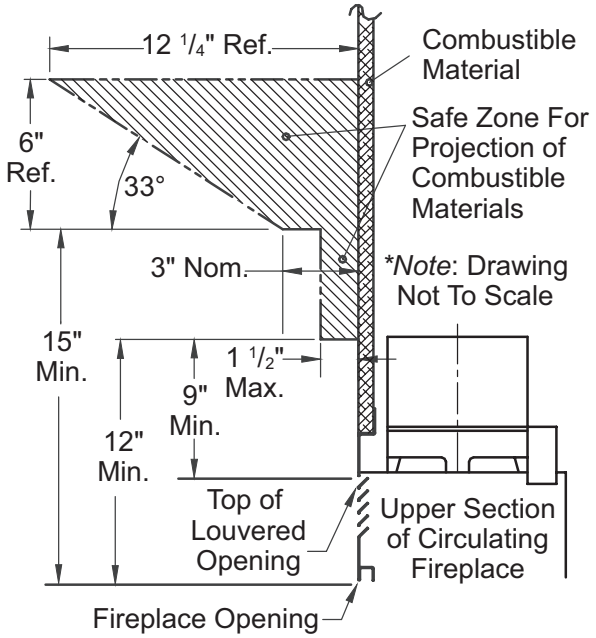

Figure 4 - Mantel Clearances to Combustible Material

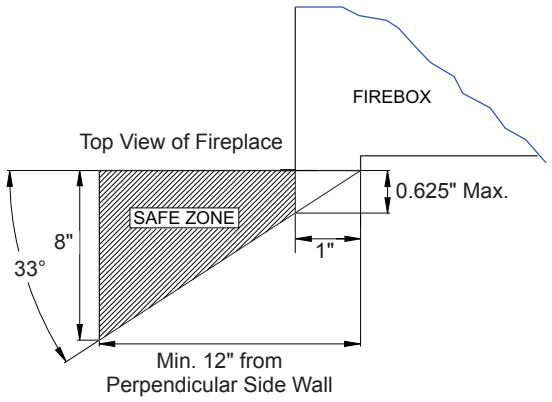

Figure 5 - Side Mantel Clearance

FIREPLACE INSTALLATION *Continued*

FAN/BLOWER KIT ASSEMBLY

Fan or blower kit is optional with this fireplace (for circulating models only). Use of blowers or fans other than those manufactured by IHP voids warranty. Fan is operated by pressing rocker switch (see Figure 6) in lower right hand corner of fireplace face. Blower is operated by turning control knob (not shown).

Fan/blower kit electrical connections are made through electrical cover plate on side of fireplace a shown in Figure 6.

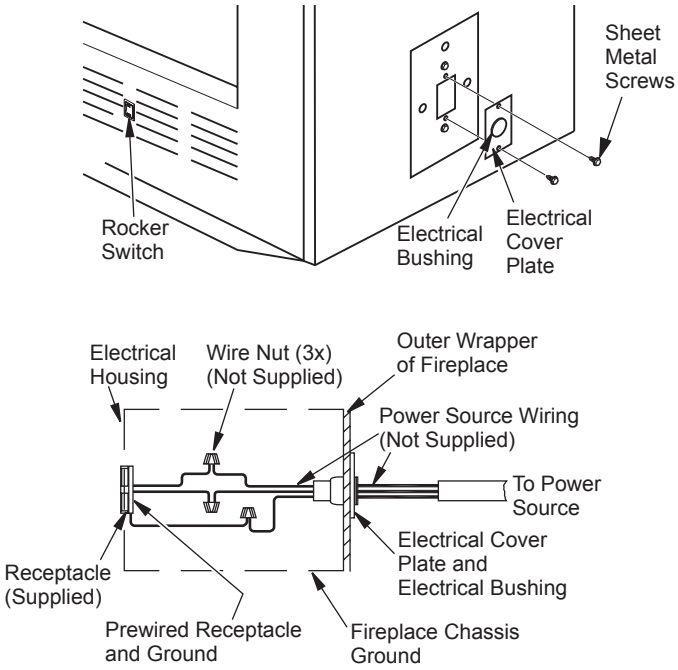

Figure 6 - Fan Switch-Electrical Bushing

Wiring Instructions

1. Remove electrical cover plate with bushing from fireplace by removing 2 sheet metal screws as shown in Figure 6.
2. Slide power source wiring through electrical bushing opening and electrical cover plate and make all necessary connections.
3. Slide all wiring connections in electrical housing as shown in Figure 6.
4. Secure electrical cover plate with screws previously removed.

Note: Electrical housing and cover plate have sharp edges. Wear protective gloves.

VENTING INSTALLATION

OPTIONAL OUTSIDE AIR KIT (MODEL AK4/AK4F)

Installation of outside air kit should be performed during rough framing of fireplace due to the nature of it's location. Outside combustion air is accessed through a vented crawl space (AK4F) or through a sidewall (AK4). See Figure 7 for instruction of operating air kit.

⚠ CAUTION: Combustion air inlet ducts shall not terminate in attic space.

The maximum height for the air vent can not exceed 3 feet below the flue gas outlet of the termination.

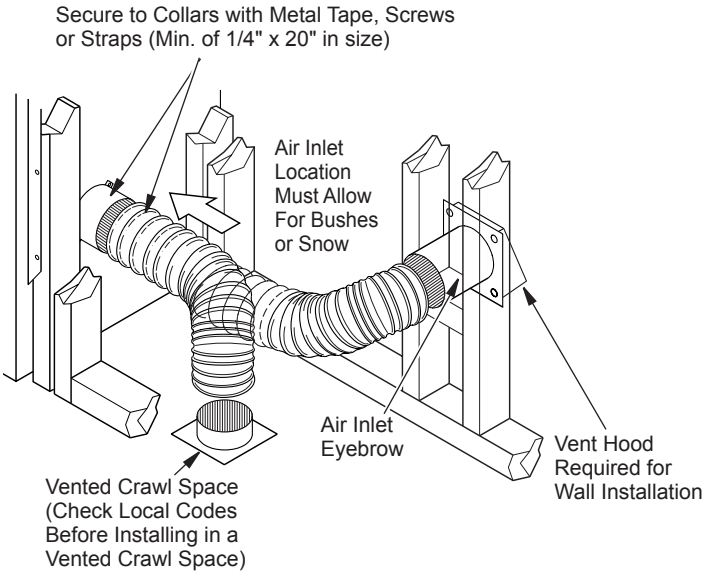

Figure 7 - Outside Air Kit

CHIMNEY PIPE

An IHP chimney system consists of 12", 18", 24", 36" and 48" snap-lock, double-wall pipe segments, planned for maximum adaptability to individual site requirements. Actual lengths gained after fitting overlaps must be taken into consideration (lineal gain) and are given in lineal gain chart (see Figure 8, page 8).

Lineal gain is actual measurable length of a part after two or more parts are connected.

⚠ WARNING: The opening in collar around chimney at top of fireplace must not be obstructed. Never use blown insulation to fill chimney enclosure.

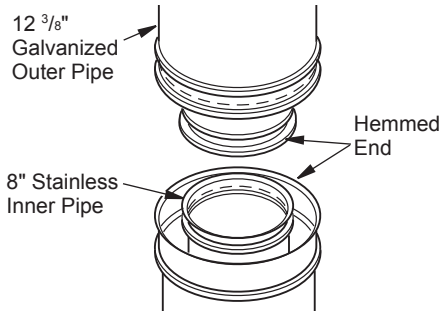

LINEAL GAIN		
PART NO.	**DESCRIPTION**	**GAIN**
42"	Fireplace	37 1/2"
12-8DM 12-8HT	Pipe Section	10 5/8"
18-8DM 18-8HT	Pipe Section	16 5/8"
24-8DM 24-8HT	Pipe Section	23 5/8"
36-8DM 36-8HT	Pipe Section	34 5/8"
48-8DM 48-8HT	Pipe Section	46 5/8"
RT-8DM	Round Termination	6 7/8"*
RTL-8DM	Round Termination	7 3/4"*
RLT-8DM	Round Termination	7 1/2"*
RTT-8DM	Round Termination with Slip Section	6 7/8" to 23 1/8"*
RTTL-8DM	Round Termination with Slip Section	8 1/2" to 21 1/2"*
RLTT-8DM	Round Termination with Slip Section	7 1/2" to 21 1/4"*
ET-8DM	Square Chase-Top	12"*
ETO-8DM	Square Chase-Top with Mesh	12"*
ETL-8DM	Square Chase-Top with Slip Section	7" to 15"*
ETLO-8DM	Square Chase-Top with Mesh & Slip Section	12" to 25 1/2"*

* The lineal gain for the terminations is measured to the flue gas outlet height.

Figure 8 - Lineal Gain

ASSEMBLY AND INSTALLATION OF DOUBLE WALL CHIMNEY SYSTEM

Each double wall chimney section consists of a galvanized outer pipe, a stainless steel inner flue pipe and a wire spacer. Pipe sections must be assembled independently as chimney is installed. When connecting chimney directly to fireplace, inner flue pipe section must be installed first with lanced side up. Outer pipe section can then be installed over flue pipe section with hemmed end up. Press down on each pipe section until lances securely engage hem on fireplace starter. Wire will assure proper spacing between inner and outer pipe sections.

Note: For Canada, use chimney parts designated HT.

⚠ Opening in collar around chimney at top of fireplace must not be obstructed. Never use blown insulation to fill chimney enclosure.

Continue to assemble chimney sections as outlined, making sure that both inner and outer pipe sections are locked together. When installing double wall snap-lock chimney together, it is important to assure joint between chimney sections is locked. Check by pulling chimney upward after locking. Chimney will not come apart if properly locked. It is not necessary to add screws to keep chimney together (exception - see Figure 11, page 9).

USING ELBOW OFFSETS (30E-8DM)

1. To achieve desired offset, you may install combinations of 12", 18", 24", 36" and 48" length of double wall pipe (see offset chart, page 9, and Figure 9, page 8).
   Note: For systems with 2 elbow sets, minimum height is 22 feet. Maximum height for any system is 50 feet.
2. Chimney weight above offset rests on return elbow. Straps must be securely nailed to rafters or joists (see Figure 10, details A and B, page 8).
3. Maximum length of pipe between supports (return elbow or 12S-8DM) is 6' of angle run. Maximum of two 6' angle run sections per chimney system (see Figure 9, page 9).
4. All pipe connections between offset and return must be secured with two screws on outer pipe only (see Figure 11, page 10). Do not penetrate inner stainless.

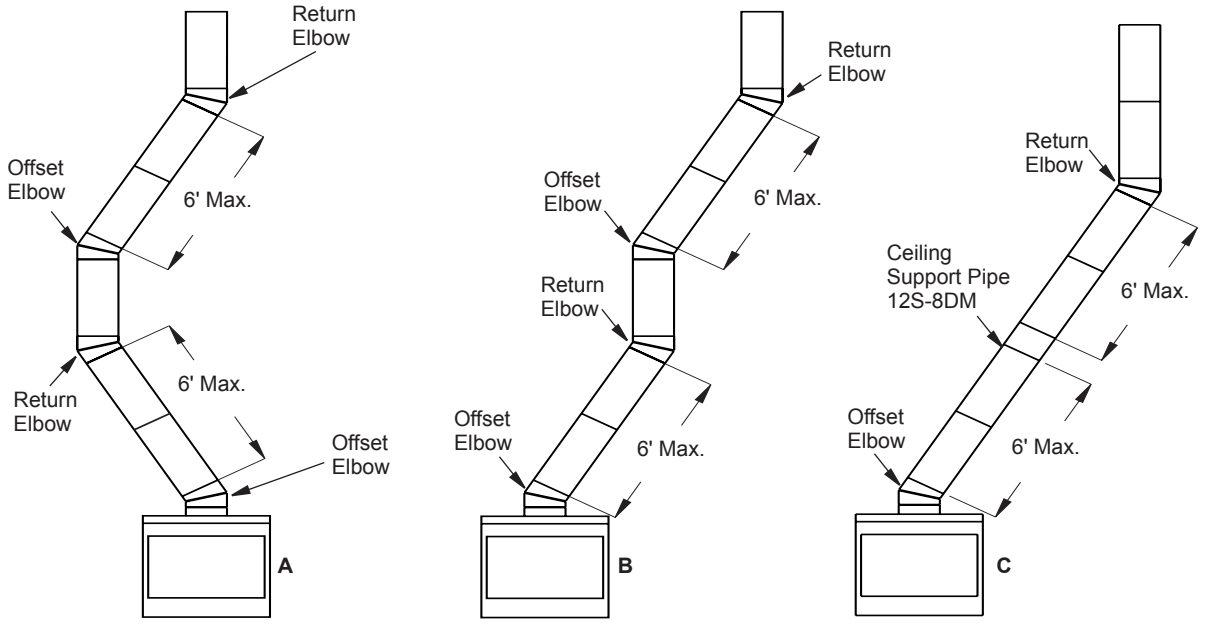

Figure 9 - Typical Offset Installation

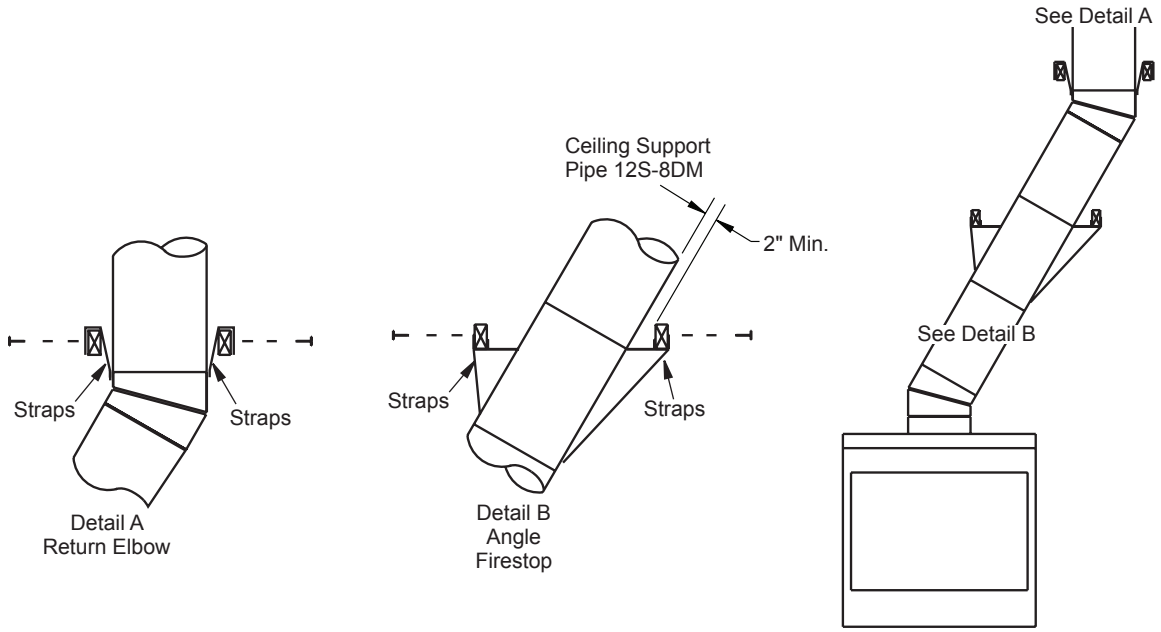

Figure 10 - Ceiling Support Pipe 12S-8DM

OFFSET	RISE	CHIMNEY LENGTH				
A	B	48"	36"	24"	18"	12"
4 3/8"	16 3/8"	ELBOW SET ONLY				
9 3/4"	25 1/2"					1
12 3/4"	30 3/4"				1	
15"	34 3/4"			1		
18"	40"				1	1
21 1/4"	46 1/4"		1			
23 3/4"	49 1/4"			1	1	
27 3/4"	56 3/4"	1				
30"	60 3/4"		1		1	
33"	66"	1				1
36"	71"	1			1	
38 1/4"	75"		2			
41 1/4"	80 1/4"		1		1	1
45"	86 3/4"		2			
46 3/4"	89 1/2"	1			1	1
51"	97"	1	1			
53 1/4"	101"		2		1	
56 1/4"	106 1/4"	2				
59 1/4"	111 1/2"	1	1		1	
61 3/4"	115 1/2"	2				1
64 3/4"	120 3/4"	2			1	
68 1/4"	127"	1	2			
70"	130"	2			1	1
74 1/4"	137 1/2"	1	2			1
76 3/4"	141 1/2"	1	2		1	
79 3/4"	146 3/4"		4			

OFFSET CHART (22-50 FT. SYSTEM HEIGHT)

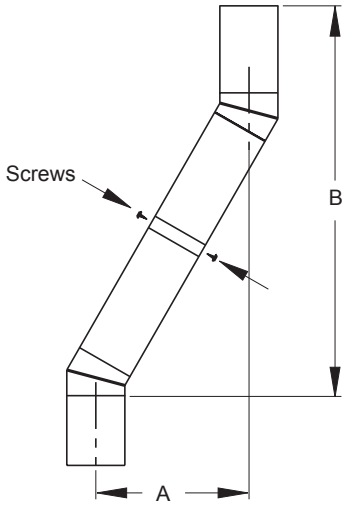

Figure 11 - Elbow Offset

FIRESTOP SPACERS (3600FS-8DM-1)

Firestop spacers are required at each point where chimney penetrates a floor space. Their purpose is to establish and maintain required clearance between chimney and combustible materials. When pipe passes through a framed opening into a living space above, firestop must be placed onto ceiling from below as shown in Figure 12.

They also provide complete separation from one floor space to another or attic space as required by most codes. When double wall pipe passes through a framed opening into an attic space, firestop must be placed into an attic floor as shown in Figure 13.

If area above is a living space, install firestop below framed hole.

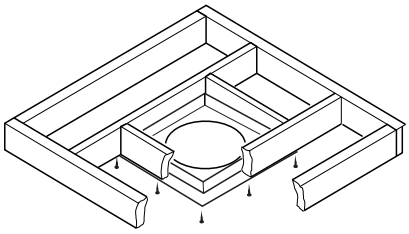

Figure 12 - Firestop Spacer with Living Space Above Ceiling

If area above is an attic or insulated area, install firestop above framed hole.

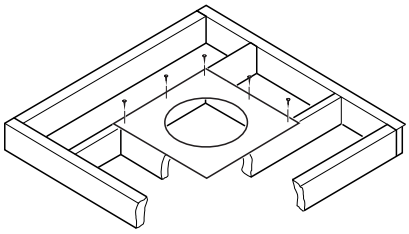

Figure 13 - Firestop Spacer with Attic Space Above Ceiling

PENETRATING ROOF

To maintain a 2" clearance to pipe on a roof with a pitch, a rectangular opening must be cut.

1. Determine center point where pipe will penetrate the roof.
2. Determine center point of the roof. Pitch is the distance the roof drops over a given span, usually 12". A 6/12 pitch means that the roof drops 6" for each 12" measure horizontally down from roof rafters.
3. Use roof opening chart (Figure 14, page 11) to determine correct opening length and flashing required.
4. Remove shingles around opening measured. Cut out this section.
5. Add next sections of pipe until end penetrates roof line. Check to see that proper clearances are maintained. Extend chimney by adding sections of double wall pipe until pipe is minimum of 30" above highest point of roof cutout. Termination and chimney must extend a minimum of 36" above highest point where it passes through roof.

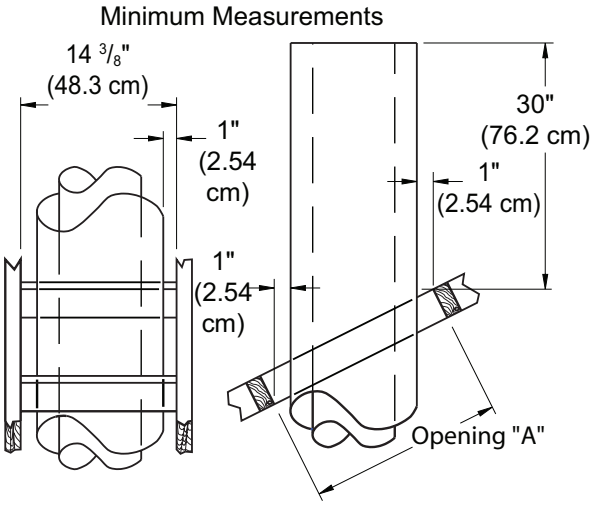

Pitch	Slope	Opening "A" Max.	Used Flashing Model No.
Flat	0°	15"	V6F-8DM
0-6/12	26.6°	16 1/8"	V6F-8DM
6/12- 12/12	45.0°	20 3/8"	V12F-8DM

Figure 14 - Roof Opening Measurements

FLASHING INSTALLATION (V6F-8DM OR V12F-8DM)

Determine flashing to be used with roof opening chart. Slide flashing over pipe until base is flat against roof. Replace as many shingles as needed to cover exposed area and flashing base. Secure in position by nailing through shingles (see Figure 15). DO NOT NAIL THROUGH FLASHING CONE.

Installing Flashing on a Metal Roof

When installing flashing on a metal roof, it is required that putty tape be used between flashing and roof. Flashing must be secured to roof using #8 x 3/4" screws and then sealed with roof coating to prevent leakage through screw holes. A roof coating must also be applied around perimeter of flashing to provide a proper seal.

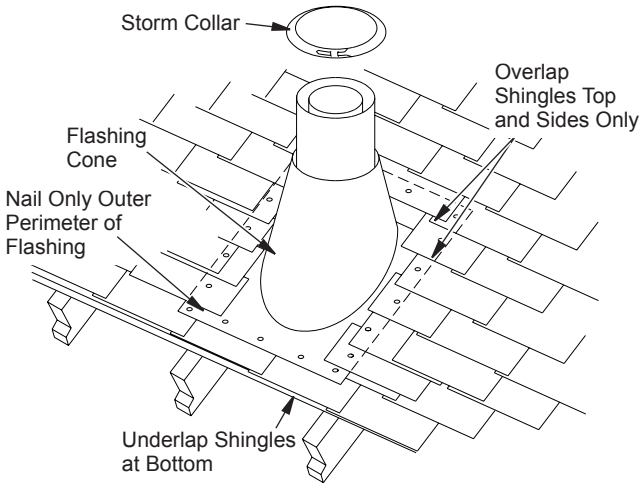

Figure 15 - Flashing Installation

Storm Collar Installation (SC1)

Place storm collar over pipe and slide down until it is snug against open edge of flashing (see Figure 16). Use SC1 for all round terminations. Apply waterproof caulk around perimeter of collar to provide a proper seal.

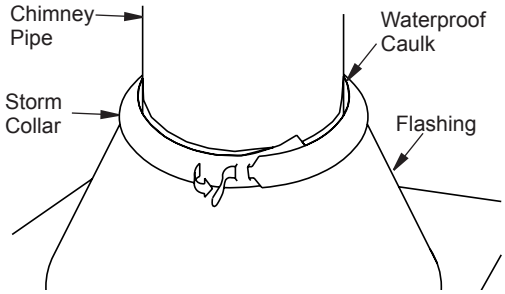

Figure 16 - Storm Collar

Terminations/Spark Arrestor

Fireplace system must be terminated with listed round top or chase terminations. In any case, refer to installation instructions supplied with termination. Terminations approved for this fireplace are RT-8DM, RTL -8DM and RLT-8DM that can be used for flashing or chase and ET-8DM, ETO-8DM, ETL-8DM and ETLO-8DM for chase style termination only. Figure 17 shows an RTL-8DM round top termination.

⚠ CAUTION: Do not seal openings on the rooftop flashing. Follow the installation instructions provided with the termination being used.

Terminations with 16" slip pipe sections are available. RTT-8DM, RTTL-8DM and RLTT-8DM are approved for flashing installations. When needed, these adjustable terminations may be used in combination with pipe assembly to achieve correct chimney height.

Note: In the rare instance there is a problem with side driven rain or wind or chimney is not drafting properly, an ADS-8DM (Anti-Draft Shield) can be used with round terminations.

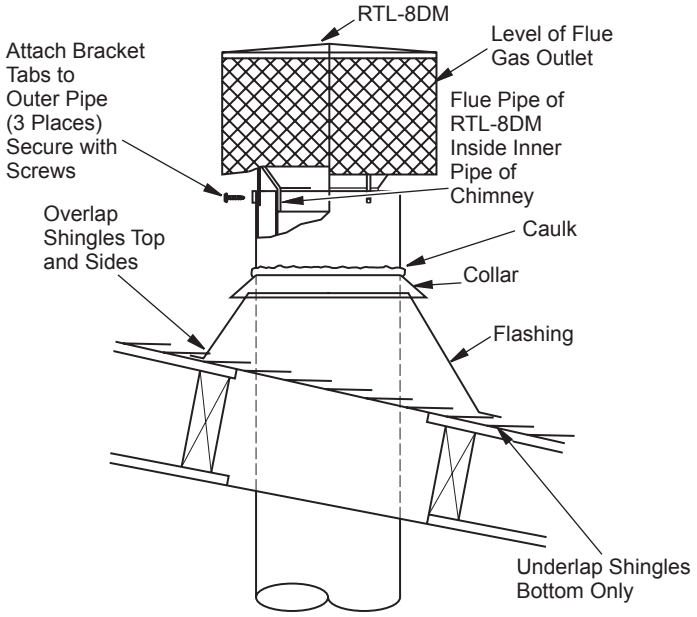

Figure 17 - Termination

CHASE INSTALLATIONS

Instructions for chase installations are included with chase style termination chosen. In a multiple chase installation, be sure to provide adequate distance between terminations to prevent smoke spillage from one termination to another. We suggest that terminations be separated at least 24", center to center and stacked at a vertical height difference of 18" (see Figure 18).

Note: If a decorative shroud is to be installed, contact manufacturer for specifications.

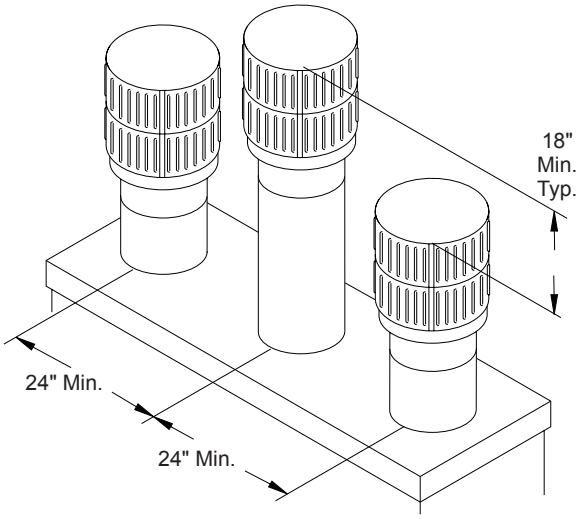

Figure 18 - Multiple Chase Installation

10 FOOT RULE

All flue gas outlet chimney terminations must extend a minimum of 3 feet in height above highest point where it passes through roof and must be at least 2 feet above highest point of the roof that is within a horizontal distance of 10 feet (see Figure 19).

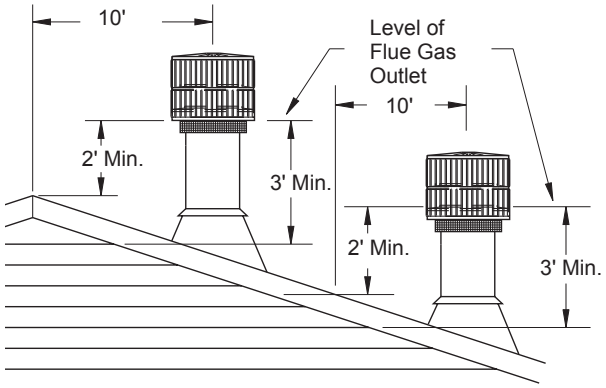

Figure 19 - 10 Foot Rule

FINISHING FIREPLACE

Combustible materials, such as wallboard, gypsum board, sheet rock, drywall, plywood, etc., may make direct contact with sides and top around fireplace face. It is important that combustible materials do not overlap face itself. Brick, glass, tile or other noncombustible materials may overlap front face provided they do not obstruct essential openings such as louvered slots. When overlapping with a noncombustible facing material, use only noncombustible mortar or adhesive.

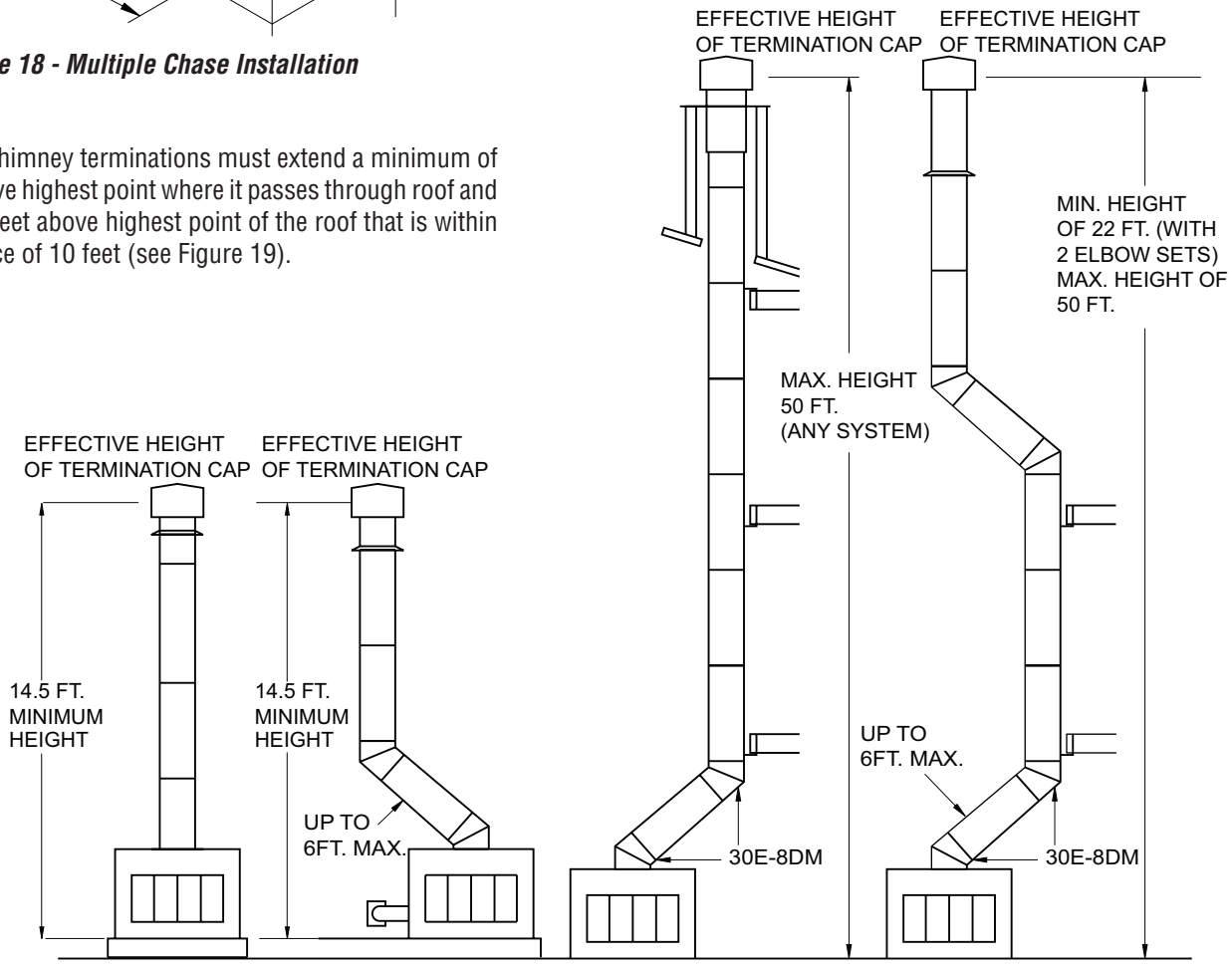

Figure 20 - Typical Residential Installations

OPTIONAL GAS LINE INSTALLATION

A gas line or gas log lighter may be installed for the purpose of installing a vented or vent-free decorative gas appliance incorporating an automatic shutoff device and complying with the Standard for Decorative Gas Appliances for Installation in Vented Fireplaces, ANSI Z21.60 or American Gas Association draft requirements for Gas Fired Log Lighters for Wood Burning Fireplaces, Draft NO. 4 dated August, 1993.

If you wish to install an unvented (vent-free) gas log set, only unvented gas log sets which have been found to comply with the standard for unvented room heaters, ANSI Z21.11.2 are to be installed in this fireplace.

Gas line hook up should be done by your supplier or a qualified service person.

Note: Before you proceed, make sure your gas supply is turned off.

Use only a 1/2" black iron pipe and appropriate fittings.

1. Remove knockout indentation on refractory or firebrick wall located above refractory hearth floor. Knockout indentation must be firmly tapped with any solid object, such as a 1/2" dowel, until it is released. Remove fragmented portions of refractory (see Figure 21).
2. Remove gas line cover plate located on either side of fireplace and pull out insulation from gas line conduit sleeve. Save insulation for reuse.
3. Run a 1/2" black iron gas line into fireplace through rear at gas line conduit sleeve (if using a raised platform, add height). Provide sufficient gas line into fireplace chamber for fitting connection (see Figure 22).
   Note: Secure incoming gas line to wood framing to provide rigidity for threaded end.
4. Repack insulation around gas line and into sleeve opening. Seal any gaps between gas line and refractory knockout hole with refractory cement or commercial furnace cement. Install gas appliance or cap off gas line if desired.

⚠ CAUTION: All gas piping and connections must be tested for leaks after installation is completed. After ensuring that gas valve is on, apply soap and water solution to all connections and joints. Bubbles forming show a leak. Correct all leaks at once. DO NOT USE AN OPEN FLAME FOR LEAK TESTING AND DO NOT OPERATE ANY APPLIANCE IF A LEAK IS DETECTED. LEAK TESTING SHOULD BE DONE BY A QUALIFIED SERVICE PERSON.

Note: An IHP hood must be installed when using an unvented gas log set (see Accessories on page 18).

⚠ WARNING: Do not operate an unvented gas log set in this fireplace with chimney removed.

If you install a decorative gas appliance (vented gas log), decorative gas appliance must comply with the Standard for Decorative Gas Appliance for Installation in Solid Fuel Burning Fireplaces, ANSI Z21.60/CSA 2.26 or Z21.84 and shall also be installed in accordance with ANSI Z223.1/NFPA 54 National Fuel Gas Codes (USA) and CAN/CGA-B149.1 National Gas And Propane Installation Code (Canada).

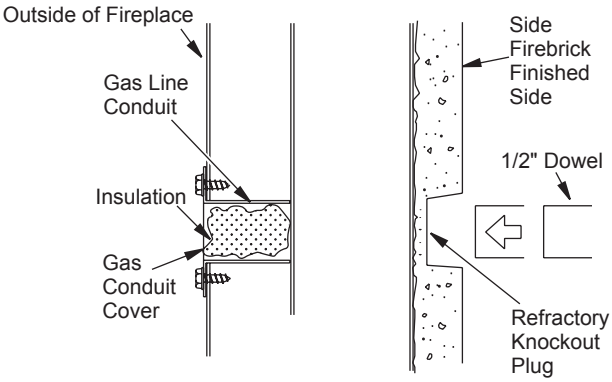

Figure 21 - Gas Line Knockout

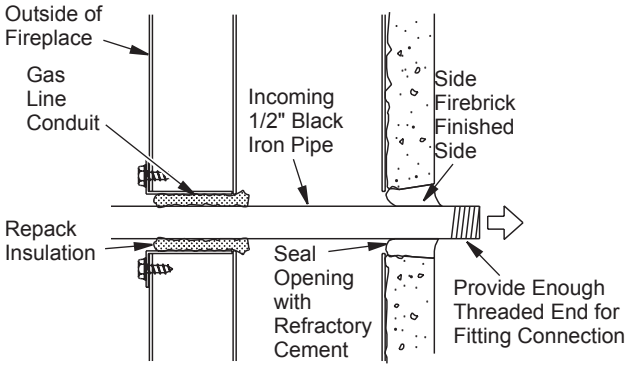

Figure 22 - Gas Line Installation

⚠ WARNING: To avoid the risk of damaging fireplace materials and increasing the risk of spreading a fire, do not use fireplace to cook or warm food.

⚠ WARNING: If the fireplace has been used for wood burning, firebox and chimney must be cleaned of soot, creosote and ashes be a qualified chimney cleaner. Creosote will ignite if heavily heated.

⚠ WARNING: When using a decorative vented gas log, damper must be removed or permanently locked in fully open position and glass doors must be in fully open position.

OPERATION AND MAINTENANCE

GLASS DOORS

Glass doors are optional with this fireplace. When fireplace is in operation, doors must be fully opened or fully closed position only or a fire hazard may be created (see Figure 23).

A fireplace equipped with glass doors operates much differently than a fireplace with an open front. A fireplace with glass doors has a limited amount of air for combustion. Excessive heat within fireplace can result if too large a fire is built or if combustion air gate is not completely open.

The following tips should be used to assure that both fireplace and glass door retain their beauty and function properly. Both the flue damper and glass doors must be fully opened before starting a fire. This will provide sufficient combustion air and maintain safe temperatures in firebox.

IMPORTANT: The glass must be allowed to warm slowly and evenly. Tempered glass will withstand a gradual temperature rise to 550° F, which is more than a normal fire will generate. Such materials as pitch/wax laden logs, very dry mill end lumber and large amounts of paper or cardboard boxes can create an excessively hot fire and should not be burned in this fireplace. Always keep fire back from doors and never allow flames to contact glass.

⚠ "WARNING: FIREPLACES EQUIPPED WITH DOORS SHOULD BE OPERATED ONLY WITH DOORS FULLY OPEN OR DOORS FULLY CLOSED. IF DOORS ARE LEFT PARTLY OPEN, GAS AND FLAME MAY BE DRAWN OUT OF THE FIREPLACE OPENING, CREATING RISKS OF BOTH FIRE AND SMOKE".

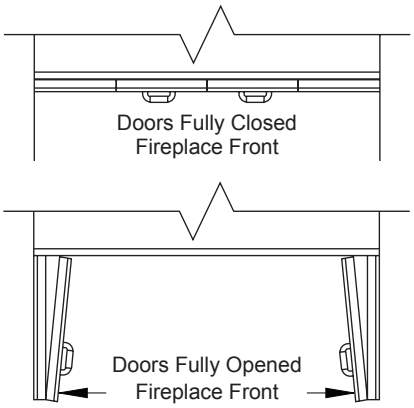

Figure 23 - Glass Doors

Cleaning Glass

Clean glass with any commercial glass cleaner or soap and water. Do not use any abrasive material to clean the glass. Do not clean glass with any cool water if glass is still hot from fire and smoke.

DAMPER HANDLE OPERATION

Damper handle, which opens and closes damper blade, is located inside firebox at center towards back wall (see Figure 24). Pushing handle back into keyway slot will free damper blade to automatically open. To close, push handle back into keyhole slot then pull down and forward to lock it in place (see Figure 25).

⚠ WARNING: Risk of fire! Replace grate with IHP model 107001-02 only. This grate has been designed to keep the operation of your fireplace safe and efficient.

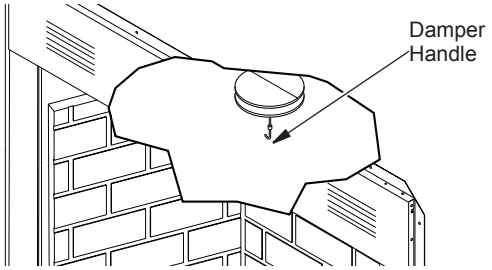

Figure 24 - Damper Handle Location

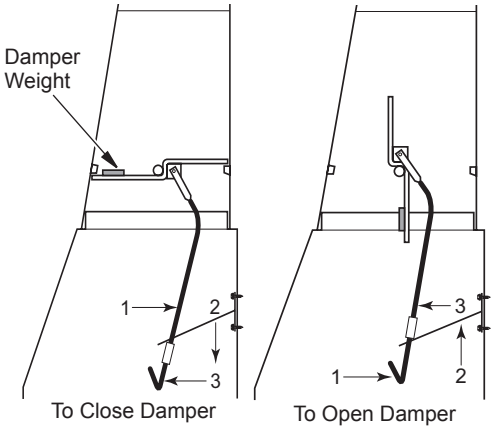

Figure 25 - Damper Rod

LOCATING ACCESS COVER PLATE

Sheet metal cover plates located underneath front hearth refractory may have shifted or moved out of place while fireplace was in transit. These cover plates must be kept in the proper location prior to using the fireplace (See Figure 26).

For further operating guidelines, instructions and warranty information, please refer to your homeowner's guide or contact your dealer.

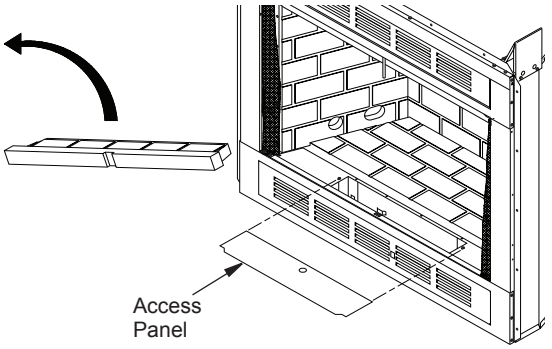

Figure 26 - Locating Access Cover Plate

REPLACEMENT PARTS

Note: Use only original replacement parts.

This will protect your warranty coverage for parts replaced under warranty.

Contact authorized dealers of this product. To locate a dealer in your area contact IHP at 1-800-655-2008. You can also visit our web site at www.Superiorfireplaces.US.com.

When calling your dealer, have ready:

- your name
- your address
- model and serial numbers of your fireplace
- how fireplace was malfunctioning
- purchase date

Usually, we require that the part is returned to the factory.

TECHNICAL SERVICE

You may have further questions about installation, operation, or troubleshooting. Please contact your IHP dealer for any questions or concerns a. When calling your dealer please have your model and serial numbers of your fireplace ready. You can also visit our web site at www.Superiorfireplaces.US.com.

PARTS

WOOD BURNING FIREPLACE MODELS WRT2042WS, WRT2042WSI, WCT2042WS, WCT2042WSI

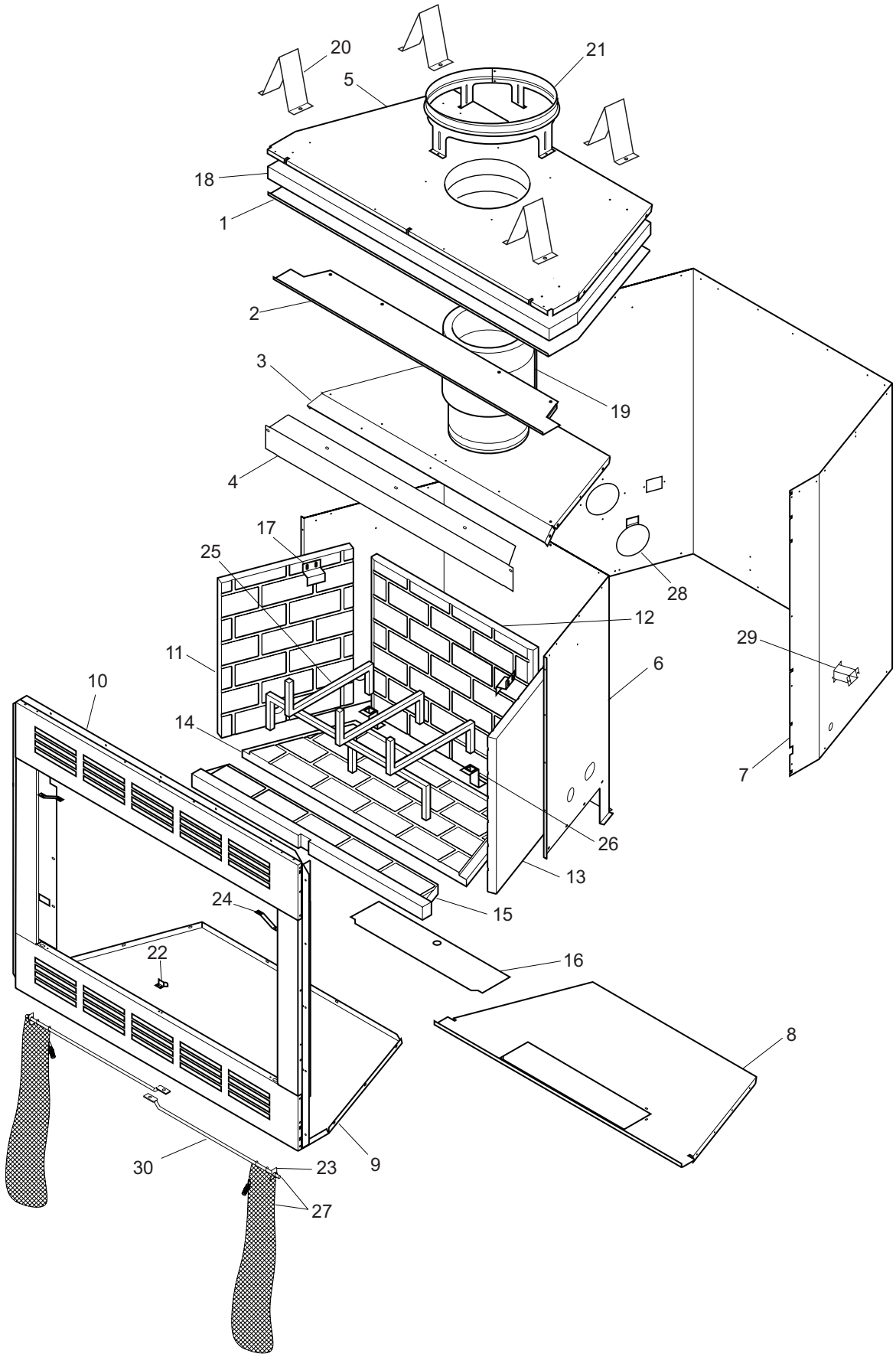

PARTS

WOOD BURNING FIREPLACE MODELS WRT2042WS, WRT2042WSI, WCT2042WS, WCT2042WSI

This list contains replaceable parts used in your fireplace.

⚠ WARNING: Contact an IHP dealer to obtain any of these parts. Never use substitute materials not approved by IHP. Use of non-approved parts can result in poor performance and safety hazards.

KEY NO.	PART NO.	DESCRIPTION	WRT2042WS WRT2042WSI	WCT2042WS WCT2042WSI	QTY.
1	**	Insulation Pan	•	•	1
2	**	Air Separator	•	•	1
3	**	Firebox Top	•	•	1
4	108302-01	Air Deflector	•	•	1
5	**	Wrapper Top	•	•	1
6	**	Firebox Wrapper	•	•	1
7	108304-01	Outer Wrapper/Insulation Assembly	•	•	1
8	**	Firebox Floor	•	•	1
9	**	Wrapper Bottom	•	•	1
10	108298-01	Front Face Weldment, Smooth	•		1
	108298-02	Front Face Weldment, Louvered		•	1
11	106971-01	Left Side Brick Liner	•	•	1
12	108310-01	Rear Brick Liner	•	•	1
13	106970-01	Right Side Brick Liner	•	•	1
14	108312-01	Bottom Brick Liner	•	•	1
15	108311-01	Front Bottom Brick Liner	•	•	1
16	21198	Blower Access Plate	•	•	1
17	20027	Refractory Retainer	•	•	2
18	20060	Circulation Plate	•	•	1
19	21366	Insulation Retainer	•	•	1
20	106959-01	Top Standoff	•	•	4
21	20023	Chimney Starter Collar	•	•	1
22	20088	Door Stop	•	•	1
23	11418	Push On Nut	•	•	2
24	20090	Spring Clip	•	•	2
25	107001-02	Wood Burning Grate	•	•	1
26	106539-02	Grate Retainers	•	•	2
27	108424-01	Screen	•	•	2
28	**	Side Damper Weldment	•	•	1
29	107128-01	Gas Conduit	•	•	4
30	108780-01	Screen Rod	•	•	2
		PARTS AVAILABLE - NOT SHOWN			
	106685-01	Male Polarized 1.4" Plug	•	•	1
	14607	Rocker Switch	•	•	1
	110037-01	Electrical Duct Assembly	•	•	1
	20093	Ember Protector	•	•	1

** Not a field replaceable part

ACCESSORIES

DOUBLE WALL PIPE

12-8DM 12-8HT
18-8DM 18-8-HT
24-8DM 24-8HT
36-8DM 36-8HT
48-8DM 48-8HT

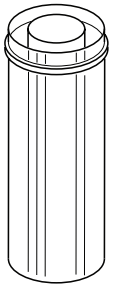

ROOF FLASHING

0 TO 6/12 PITCH - V6F-8DM
6/12 TO 12/12 PITCH - V12F-8DM

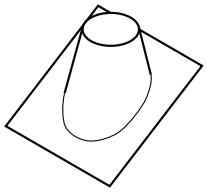

ANTI-DRAFT SHIELD

(Round Top Termination Only)
ADS-8DM

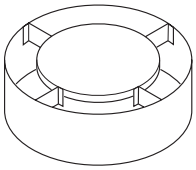

30° OFFSET AND RETURN

30E-8DM, 30E-HT

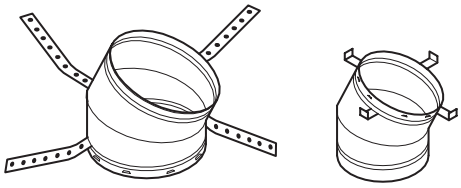

ADJUSTABLE HOOD

Antique Brass Finish - GA6053
Black Painted Finish - GA6050
Required when installing a vent-free gas log in this fireplace.

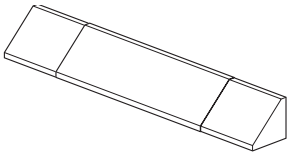

BI-FOLD GLASS DOOR

BDB36 - Black
BDB36B - Brushed Brass
BDB36P - Platinum

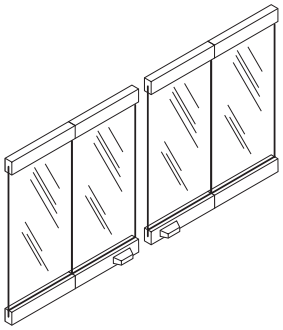

STORM COLLAR

SC1-1

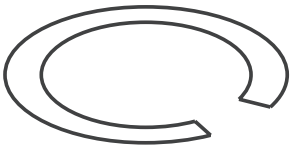

1" FIRESTOP SPACER

3600FS-8DM-1

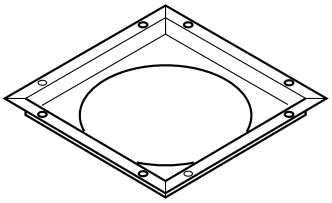

FAN KIT - BK3

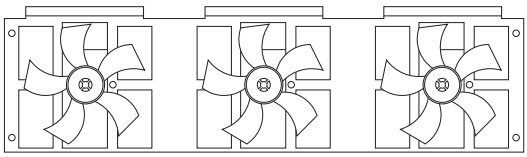

BLOWER KIT - BK

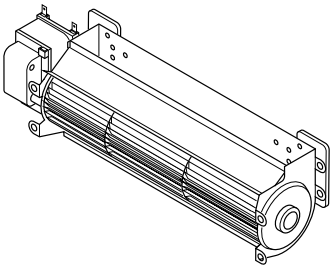

OUTSIDE AIR KIT FOR SIDE WALL INSTALLATION - AK4

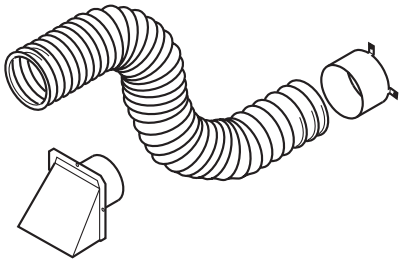

OUTSIDE AIR KIT FOR FLOOR INSTALLATION

AK4F

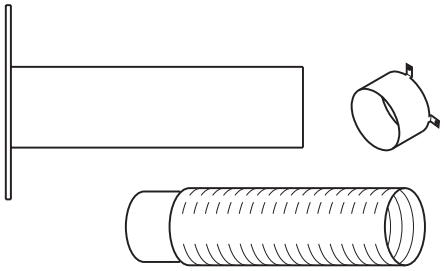

MESH ROUND TOP TERMINATIONS

RT-8DM, RT-8HT, RTL-8DM AND RTL-8HT

MESH ROUND TOP TERMINATIONS WITH SLIP SECTION

RTT-8DM, RTT-8HT, RTTL-8DM AND RTTL-8HT

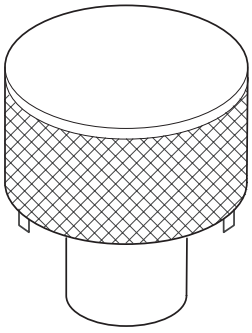

ROUND TOP TERMINATIONS WITH LOUVERS

RLT-8DM, RLT-8HT

ROUND TOP TERMINATIONS WITH LOUVERS WITH SLIP SECTION

RLTT-8DM, RLTT-8HT

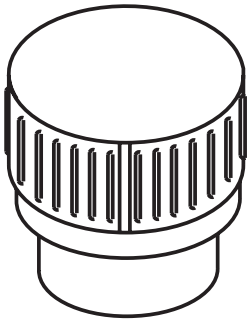

SQUARE TOP TERMINATION WITH LOUVERS

ET-8DM, ET-8HT

SQUARE TOP TERMINATION WITH LOUVERS AND SLIP SECTION

ETL-8DM, ETL-8HT

MESH SQUARE TOP TERMINATION

ETO-8DM

MESH SQUARE TOP TERMINATION WITH SLIP SECTION

ETLO-8DM

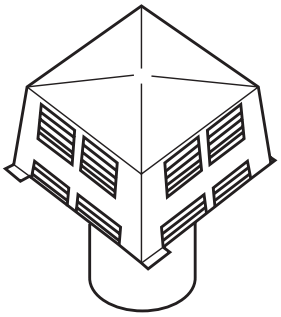

Innovative Hearth Products reserves the right to make changes at any time, without notice, in design, materials, specifications, prices and also to discontinue colors, styles and products. Consult your local distributor for fireplace code information.

P126631 01

Printed in U.S.A. © 2013 IHP LLC
P/N 126631-01 Rev. A 11/2013.

INNOVATIVE HEARTH PRODUCTS

1508 Elm Hill Pike, Suite 108
Nashville, TN 37210
1-800-655-2008
www.IHP.US.com